PUMP DATA SHEET	
PUMP CODE	23507
MODEL	RR 15.20 N DX

FEATURES	
SHAFT DIAMETER AND LENGHT (mm)	24 x 40
SUCTION	G 1/2"
DELIVERY	G 3/8"
OIL	15W40
OIL QTY (kg)	0,35
WEIGHT (kg)	7,6

SPECIFICATIONS FROM CATALOGUE	
RPM	1450
FLOW RATE (lpm)	15
MAX WORKING PRESSURE (bar)	200
ABSORBED POWER (kW)	5,5
ABSORBED POWER (HP)	7,4

MATERIAL	
CRANKCASE	Pressure die-cast aluminium alloy
HEAD	Forged brass
CONNECTING ROD	Zinc-aluminium alloy
PLUNGER	Ceramic
GASKETS MATERIAL	NBR COMPOUND

PERFORMANCE CURVES

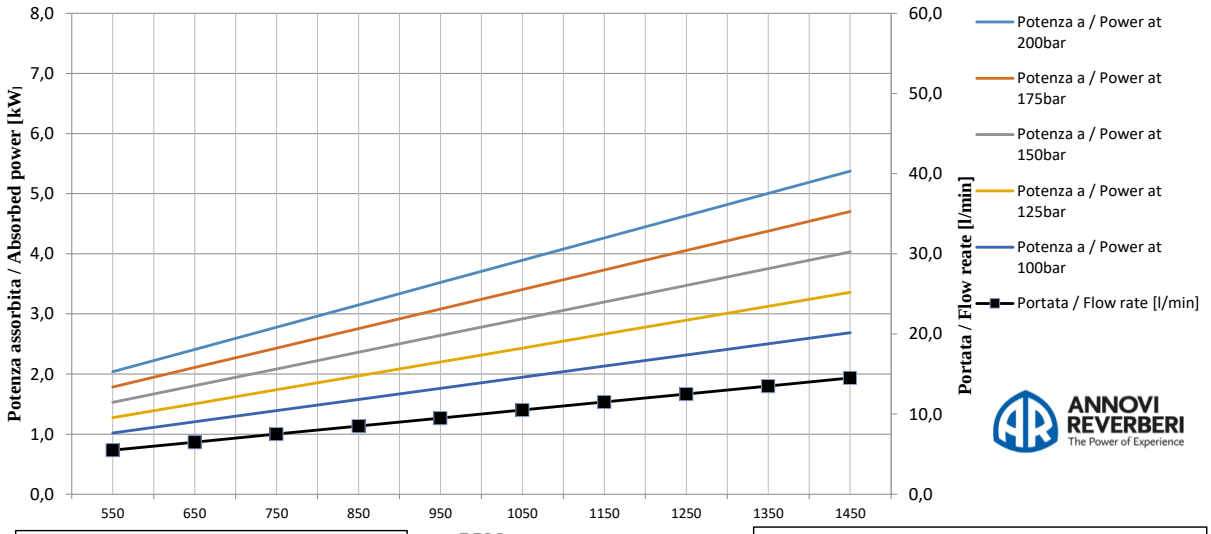

ANNOVI REVERBERI
The Power of Experience

I DATI TECNICI E LE DIMENSIONI SONO INDICATIVI
E POSSONO ESSERE MODIFICATI SENZA PREAVVISO.
TECHNICAL DATA AND DIMENSIONS ARE INDICATIVES
AND SUBJECT TO CHANGE WITHOUT NOTICE.

REMARK	NOTA
DATA CALCULATED WITH	DATI CALCOLATI CON
- 95% VOLUMETRIC EFFICENCY	- 95% RENDIMENTO VOLUMETRICO
- 90% MECHANICAL EFFICENCY	- 90% RENDIMENTO TOTALE
- INLET PRESSURE	- ALIMENTAZIONE DA RETE
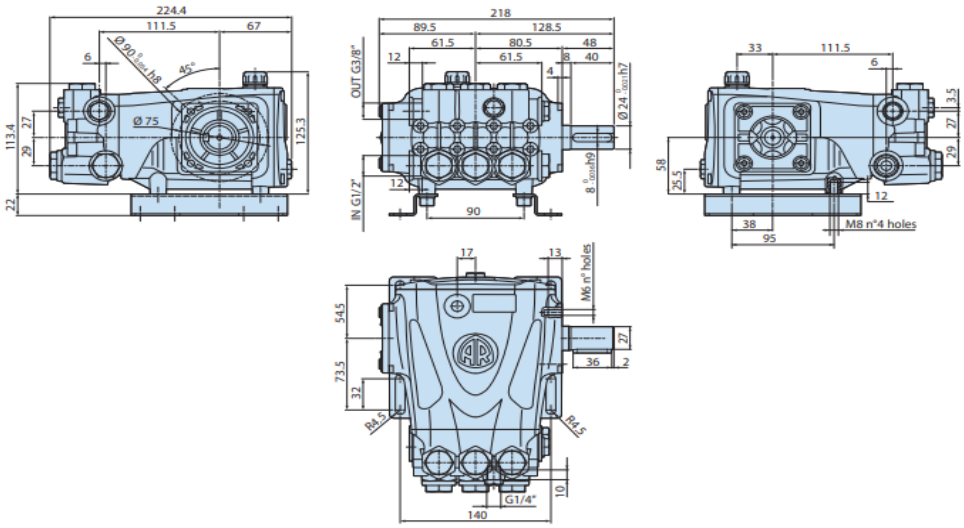
OVERALL DIMENSIONS